SB18 (i/m)

user manual (EN)

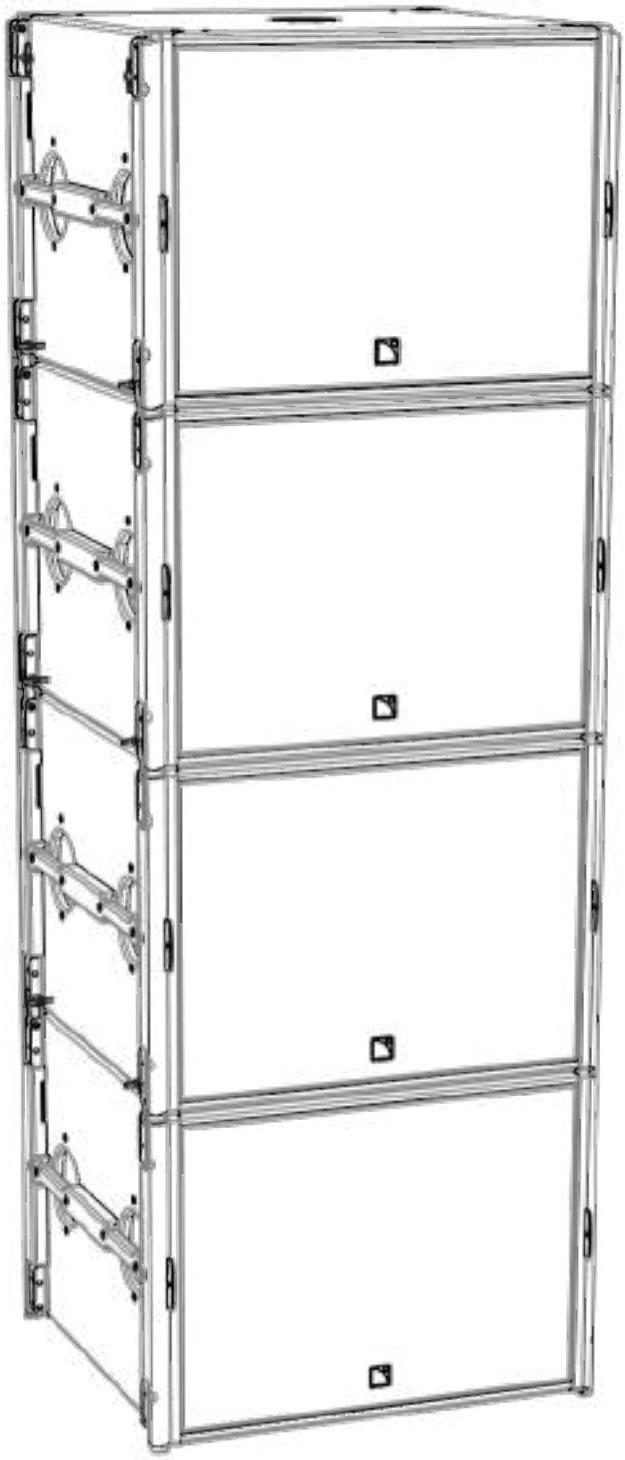

Document reference: SB18_UM_6.0

Distribution date: March 9, 2021

© 2021 L-ACOUSTICS®. All rights reserved.

No part of this publication may be reproduced or transmitted in any form

or by any means without the express written consent of the publisher.

SAFETY INSTRUCTIONS

1. **Read this manual**
2. **Follow all SAFETY INSTRUCTIONS as well as DANGER and OBLIGATION warnings**
3. **Never incorporate equipment or accessories not approved by L-ACOUSTICS®**
4. **Read all the related PRODUCT INFORMATION documents before exploiting the system**
   The product information document is included in the shipping carton of the related system component.
5. **Read the RIGGING MANUAL before installing the system**
   Use the rigging accessories described in the rigging manual and follow the associated procedures
6. **Beware of sound levels**
   Do not stay within close proximity of loudspeakers in operation and consider wearing earplugs.
   Loudspeaker systems are capable of producing very high sound pressure levels (SPL) which can instantaneously lead to permanent hearing damage to performers, production crew and audience members. Hearing damage can also occur with prolonged exposure to sound: 8 h at 90 dB(A), 30 min at 110 dB(A), less than 4 min at 130 dB(A).

SYMBOLS

The following symbols are used in this document:

DANGER
This symbol indicates a potential risk of harm to an individual or damage to the product.
It can also notify the user about instructions that must be strictly followed to ensure safe installation or operation of the product.

ELECTRICAL HAZARD
This symbol indicates a potential risk of electrical injury.
It can also notify the user about instructions that must be strictly followed to ensure safe installation or operation of the product.

OBLIGATION
This symbol notifies the user about instructions that must be strictly followed to ensure proper installation or operation of the product.

INFORMATION
This symbol notifies the user about complementary information or optional instructions.

SB18 / SB18i / SB18m SUBWOOFER
USER MANUAL
VERSION 6.0

WELCOME TO L-ACOUSTICS®

Thank you for choosing the L-ACOUSTICS® **SB18 system**.

This document contains essential information on using the system properly. Carefully read this document in order to become familiar with the system.

As part of a continuous evolution of techniques and standards, L-ACOUSTICS® reserves the right to change the specifications of its products and the content of its document without prior notice.

Please check the L-ACOUSTICS® web site on a regular basis to download the latest document and software updates: www.l-acoustics.com.

CONTENTS

SB18 SUBWOOFER ENCLOSURE 5

1 SYSTEM COMPONENTS 6

1.1 Loudspeaker enclosure 6
1.2 Powering and driving system 6
1.3 Loudspeaker cables 6
1.4 Rigging element 6
1.5 Software application 6

2 LOUDSPEAKER CONFIGURATIONS 8

2.1 Standard configuration 8
2.2 Cardioid configuration 9

3 LOUDSPEAKER CONNECTION 10

3.1 Connectors 10
3.2 Connection to LA4 / LA4X 11
3.3 Connection to LA8 12
3.4 Connection to LA12X 13

APPENDIX A PRESET DESCRIPTION 14

[SB18_60] or [SB18_100] 14
[SB18_60_C] / [SB18_60_Cx] or [SB18_100_C] / [SB18_100_Cx] 14

APPENDIX B RECOMMANDATION FOR SPEAKER CABLES 14

APPENDIX C SPECIFICATIONS 15

SB18 SUBWOOFER ENCLOSURE

The SB18 is the recommended subwoofer for modular WST® line sources and coaxial enclosures. It allows extending the operating frequency range of the system down to 32Hz.

The SB18 features one 18" neodymium speaker in a dual bass-reflex tuned enclosure. It provides impact, sensitivity, low thermal compression and reduced distortion. One of the vents features a progressive profile allowing laminar airflow and reduced turbulence noise, even at the highest operating levels. These combined properties contribute to the sonic qualities of the SB18 in terms of precision and musicality. The cabinet is made of first grade Baltic birch plywood to ensure maximum acoustical and mechanical integrity.

A 4-point rigging system is integrated into the cabinet and allows SB18 subwoofers to be flown or ground-stacked, as a standalone array or within a vertical SB18 / Kara (II) array. The cabinet also features a pole mount socket for XT / X or Kiva (II) enclosures.

The SB18 is driven and amplified by the LA4X, LA8 or LA12X controller. These ones ensure linearization, protection and optimization for the loudspeaker system in its different configurations, cardioid included.

SB18 / SB18i / SB18m
In this document, the SB18 term and illustration will refer equally to SB18, SB18i or SB18m. These products are different versions of the same subwoofer and share the same operating modes, presets and recommended configurations. The rigging system of each version has been designed to be compatible with a distinct main system: SB18 with Kara (II), SB18i with Karai and SB18m with ARCS® Focus/Wide. All SB18 versions feature a pole mount socket for use with XT/X, Kiva (II) or ARCS® Focus/Wide.

1 SYSTEM COMPONENTS

The system approach developed by L-ACOUSTICS® consists in offering a global solution that guarantees the highest and most predictable level of performance at any step of loudspeaker system deployment: modeling, installation, and operation. A complete L-ACOUSTICS® system includes enclosures, amplified controllers, cables, rigging system and software applications.

1.1 Loudspeaker enclosure

SB18	Subwoofer enclosure, down to 32 Hz.

Loudspeaker system design
Sound design aspects are beyond the scope of this document. However, the various applications of the system will be based on the loudspeaker configurations presented in this document.

1.2 Powering and driving system

LA4, LA4X, LA8, LA12X	Amplified controller with DSP, preset library and networking capabilities
LA-RAK	Touring rack containing three LA8, for mains, audio signals and network distribution
LA-RAK II AVB	Touring rack containing three LA12X, for mains, audio signals and network distribution

Operating instructions
Refer to the **LA4, LA4X, LA8, LA12X, LA-RAK or LA-RAK II AVB manuals.**

1.3 Loudspeaker cables

DO cables (DO.7, DO10, DO25)	8-point PA-COM® loudspeaker cables (4 mm² section). Respective lengths of 0.7 m/2.3 ft, 10 m/32.8 ft, and 25 m/82 ft.
DOSUB-LA8	Breakout cable for four passive enclosures. 8-point PA-COM® to 4 × 2-point speakON® (4 mm² section).
DO3WFILL	Breakout cable for one 2-way active enclosure and two passive enclosures 8-point PA-COM® to 2 × 2-point speakON® and 1 × 4-point speakON® (4 mm² section).
SP cables (SP.7, SP5, SP10, SP25)	4-point speakON® loudspeaker cables (4 mm² section). Respective lengths of 0.7 m/2.3 ft, 5 m/16.4 ft, 10 m/32.8 ft and 25 m/82 ft.
SP-Y1	Breakout cable for two passive enclosures. 4-point speakON® to 2 × 2-point speakON® (2.5 mm² section). Provided with CC4FP adapter.

Information about the connection of the enclosures to the LA amplifiers is given in this document.
Refer to the **LA4, LA4X, LA8, LA12X, LA-RAK or LA-RAK II AVB manuals** for detailed instructions about the whole cabling scheme, including modulation cables and network.

1.4 Rigging element

Rigging elements or procedures are not presented in this document.
According to the version of the subwoofer and the system to set-up, refer to the applicable rigging manual.

1.5 Software application

SOUNDVISION	Proprietary acoustical and mechanical 3D modeling software.
LA NETWORK MANAGER	Remote control and monitoring of amplified controllers

Using L-ACOUSTICS® software
Refer to the **SOUNDVISION user manual** and the **LA NETWORK MANAGER tutorial**.

SB18

LA-RAK

LA4

LA4X

LA8

DO.7

SPY1

SP.7

DOSUB-LA8

DO10

SP5

SP10

DO3WFILL

DO25

SP25

Soundvision

LA Network Manager

SB18 system components (excluding rigging elements and modulation cables)

2 LOUDSPEAKER CONFIGURATIONS

2.1 Standard configuration

The standard configuration corresponds to the use of subwoofers as single elements or as standard subwoofer arrays. In this configuration the system operates with an omni-directional directivity pattern.

The [SB18_60] preset offers a 60 Hz upper frequency limit.

The [SB18_100] preset offers a 100 Hz upper frequency limit.

The SB18 subwoofers are driven by the LA4, LA4X, LA8, or LA12X amplified controllers.

SB18 in standard configuration

[PRESET] ▶ [SB18_60] or [SB18_100]

LF extension (-10 dB): 32 Hz

Directivity pattern

Omni-directional

Vertical

Horizontal

On-end

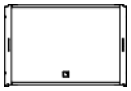
Single

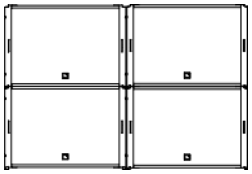
Block

Delay settings
When combining a line source with subwoofers, delays may have to be added to the presets. Refer to the **PRESET GUIDE** to obtain the pre-alignment delay values.

Distance between enclosures
Place the subwoofer enclosures side by side.
If not possible, the maximum distance between two adjacent acoustic centers must be:

- 1.7 m with [SB18_100]
- 2.80 m for [SB18_60]

2.2 Cardioid configuration

The cardioid configuration corresponds to the use of subwoofers as cardioid subwoofer arrays. In this configuration, the system produces a rear SPL rejection. Refer to the **Cardioid configurations** technical bulletin.

The [SB18_60_C] / [SB18_60_Cx] presets feature a 60 Hz upper frequency limit.
The [SB18_100_C] / [SB18_100_Cx] presets feature a 100 Hz upper frequency limit.

They both feature delay settings optimized for cardioid SB18 arrays.

The SB18 subwoofers are driven by the LA4, LA4X or LA8 amplified controllers.

SB18 in cardioid configuration

	Directivity pattern Horizontal symmetric Central rear rejection	Directivity pattern Horizontal asymmetric Rear rejection on the side of the reversed subwoofer
[PRESET] [SB18_60_C] / [SB18_60_Cx] or [SB18_100_C] / [SB18_100_Cx] LF extension (-10 dB): 32 Hz	 Vertical	 Horizontal On-end 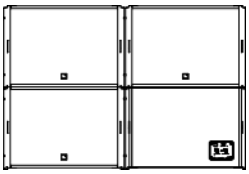 Block

Delay settings
When combining a line source with subwoofers, delays may have to be added to the presets. Refer to the **PRESET GUIDE** to obtain the pre-alignment delay values.

Distance between enclosures
Place the subwoofer enclosures side by side.
If not possible, the maximum distance between two adjacent acoustic centers must be:

- 1.7 m with [SB18_100_C] / [SB18_100_Cx]
- 2.8 m for [SB18_60_C] / [SB18_60_Cx]

3 LOUDSPEAKER CONNECTION

3.1 Connectors

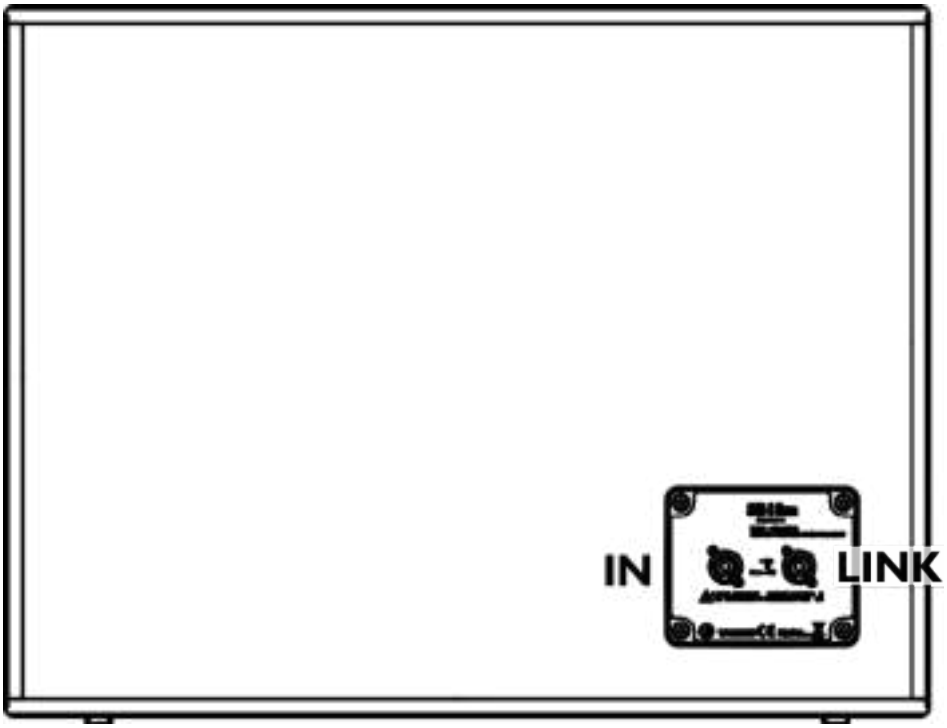

The SB18 subwoofer is equipped with two 4-point speakON® connectors.

The IN connector allows receiving the audio signal and the LINK connector allows routing it to another SB18 enclosure in parallel.

The SB18 connection in parallel is only possible with the LA8 or LA12X amplified controller.

Internal pinout for L-ACOUSTICS® subwoofers enclosures

speakON® points	1+	1-	2+	2-
Transducer connectors	LF +	LF -	Not used	Not used

3.2 Connection to LA4 / LA4X

Maximum of 4 enclosures per LA4 / LA4X
1 SB18 can be connected to each output channel on the LA4. Therefore, a single LA4 amplified controller can drive up to 4 enclosures.

Cardioid configuration
Connect the reversed subwoofer to OUT 1 to use the cardioid preset.

Impedance load
8 Ω for 1 SB18.

To connect the SB18 to the LA4 / LA4X, 2 options are available.

Option A

▶ Use **SP cables** (SP.7, SP5, SP10 or SP25) to connect one enclosure to each of the four LA4 / LA4X output channels.

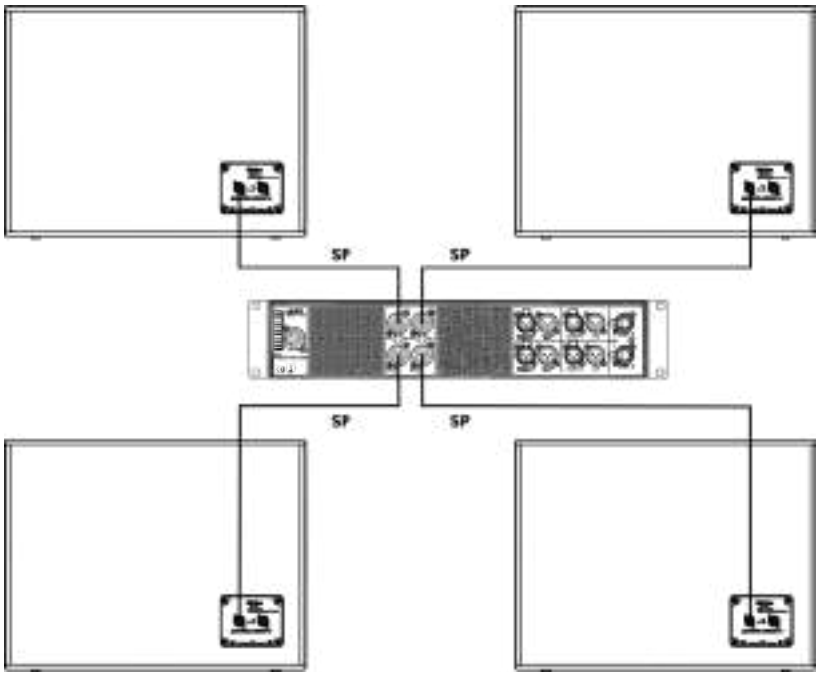

Option B

▶ Connect an **SP cable** (SP.7, SP5, SP10 or SP25) to the OUT1/OUT2 and OUT3/OUT4 connectors of the LA4 / LA4X.
▶ Use a **CC4FP adapter** to connect an **SP-Y1 cable** and separate the two output channels.
▶ Apply the same cabling scheme for the OUT3/OUT4 connector.

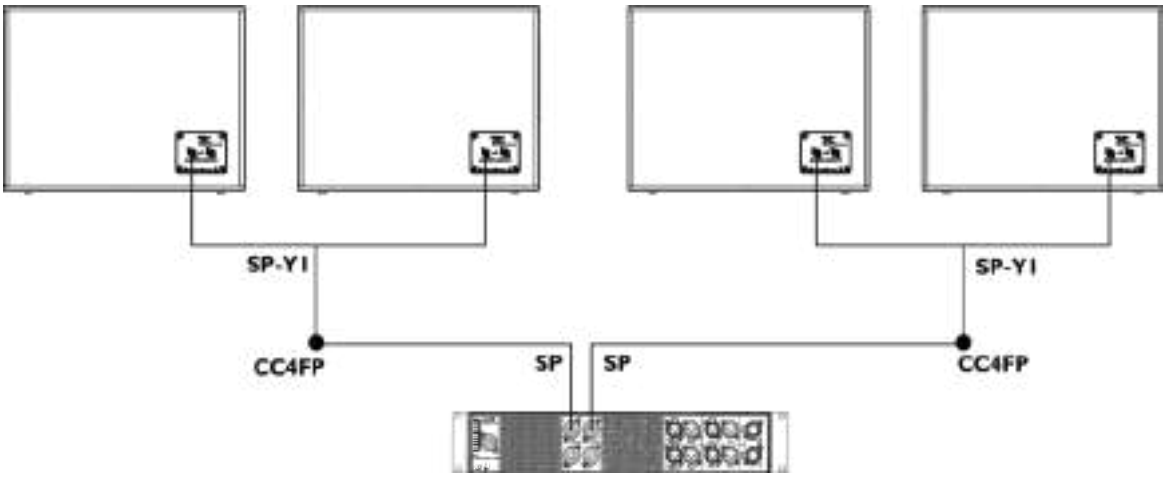

3.3 Connection to LA8

Maximum of 6 enclosures per LA8
LA8 can drive up to 2 SB18 per output, but no more than 6 per controller at high level.

Cardioid configuration
Connect the reversed subwoofers to OUT 1 to use the cardioid preset.

Impedance load
8 Ω for 1 enclosure, 4 Ω for 2 enclosures.

To connect the SB18 to the LA8, 2 options are available.

Option A

- ▶ Connect a **DO cable** (DO.7, DO10 or DO25) to the LA8 PA-COM® connector
- ▶ Use the **DOSUB-LA8** to separate the four output channels.
- ▶ If necessary, use **SP cables** to connect additional SB18 enclosures in parallel with the first ones.

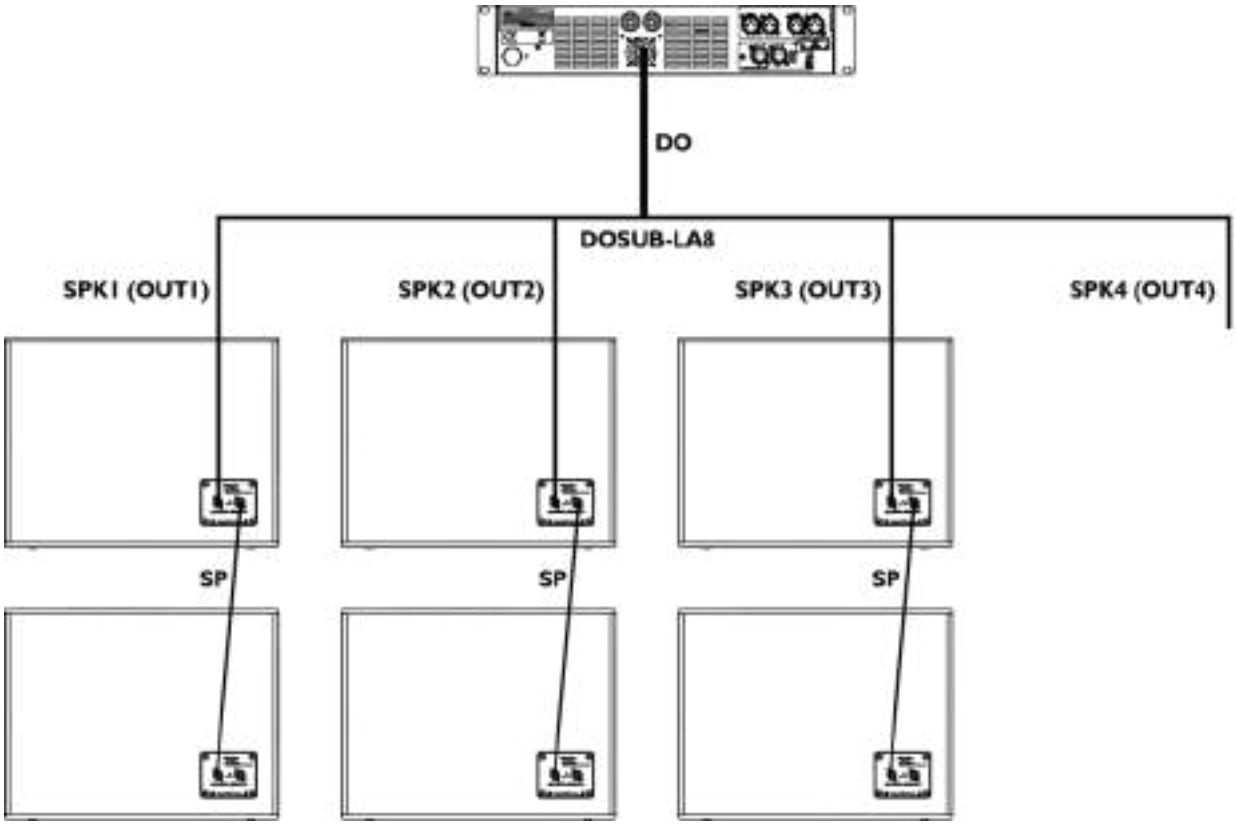

Option B

With various enclosure types connected to the same amplifier, this cabling scheme needs a custom preset.

▶ Connect an **SP** cable (SP.7, SP5, SP10 or SP25) to the OUT1/OUT2 and OUT3/OUT4 LA8 speakON® connectors.
▶ Use a **CC4FP adapter** to connect an **SP-Y1** cable and separate the two output channels.
▶ If necessary, use **SP cables** to connect additional similar enclosures in parallel with the first ones.

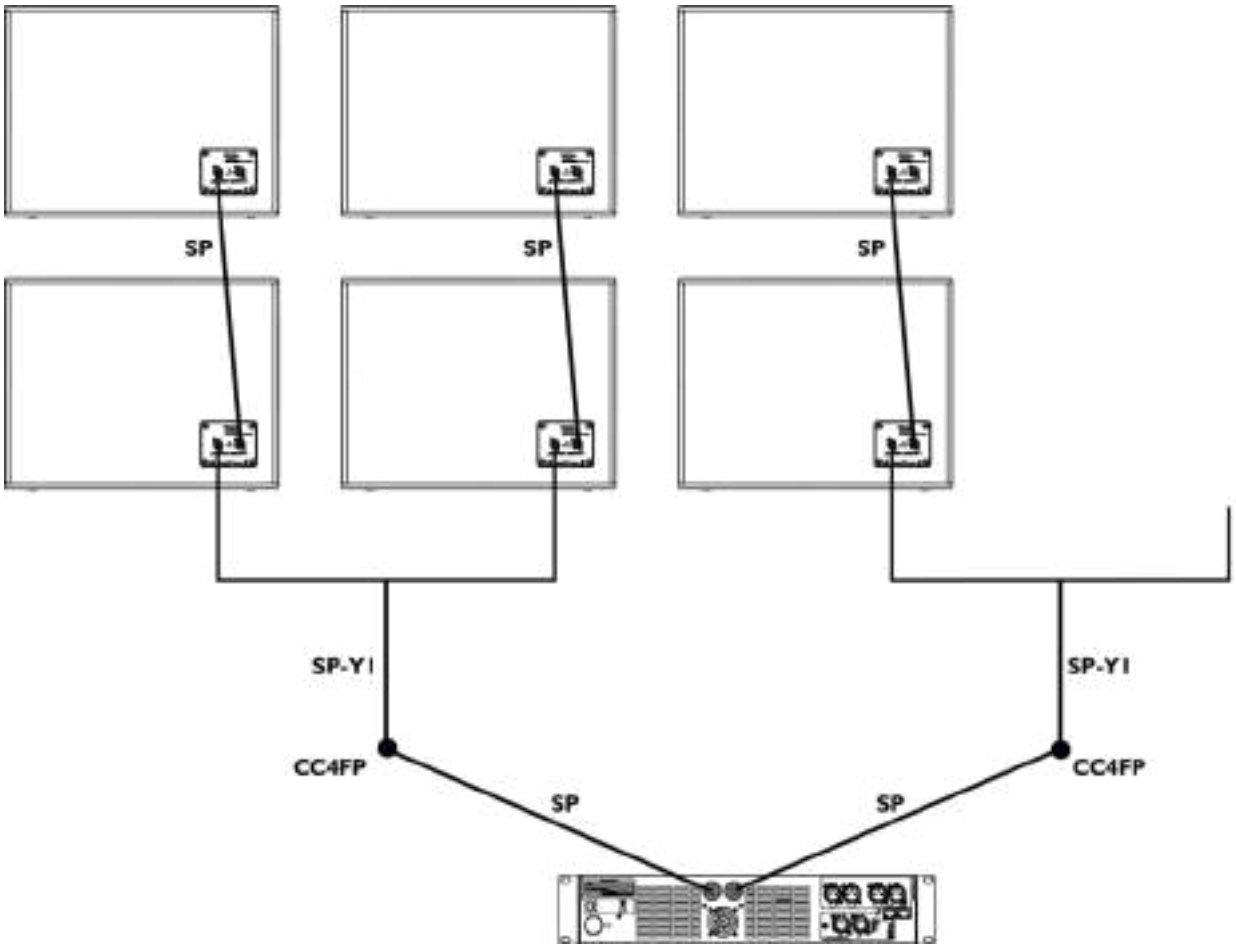

3.4 Connection to LA12X

Refer to the **Amplification reference** technical bulletin for the latest information on compatibility with amplified controllers and cabling schemes for all enclosure types.

APPENDIX A PRESET DESCRIPTION

[SB18_60] or [SB18_100]

The [SB18_60] preset provides the subwoofer enclosures with an upper frequency limit at 60 Hz.

The [SB18_100] preset provides the subwoofer enclosures with an upper frequency limit at 100 Hz.

It is used for SB18 subwoofers deployed as single elements or arrays in standard configuration.

Loudspeaker elements	Amplifier outputs	Channels	Default parameters				
			Routing	Gain	Delay	Polarity	Mute
SB18	OUT 1	SB	IN A	0 dB	0 ms	+	ON
SB18	OUT 2	SB	IN A	0 dB	0 ms	+	ON
SB18	OUT 3	SB	IN B	0 dB	0 ms	+	ON
SB18	OUT 4	SB	IN B	0 dB	0 ms	+	ON

[SB18_60_C] / [SB18_60_Cx] or [SB18_100_C] / [SB18_100_Cx]

The [SB18_60_C] / [SB18_60_Cx] presets provide the subwoofer enclosures with an upper frequency limit at 60 Hz.

The [SB18_100_C] / [SB18_100_Cx] presets provide the subwoofer enclosures with an upper frequency limit at 100 Hz.

They both feature optimized delay settings for subwoofers deployed arrays in cardioid configuration.

Loudspeaker elements	Amplifier outputs	Channels	Default parameters				
			Routing	Gain	Delay	Polarity	Mute
Reversed SB18	OUT 1	SR	IN A	0 dB	0 ms	+	ON
SB18	OUT 2	SB					ON
SB18	OUT 3	SB					ON
SB18	OUT 4	SB					ON

APPENDIX B RECOMMANDATION FOR SPEAKER CABLES

Cable quality and resistance
Only use high-quality fully insulated speaker cables made of stranded copper wire.
Use cables of gauge offering low resistance per unit length and keep the cables as short as possible.

The following table provides the recommended maximum length depending on the cable cross-section and on the impedance load connected to the amplifier.

			Recommended maximum length					
Cable cross-section			8 Ω load		4 Ω load		2.7 Ω load	
mm^2	SWG	AWG	m	ft	m	ft	m	ft
2.5	15	13	30	100	15	50	10	33
4	13	11	50	160	25	80	17	53
6	11	9	74	240	37	120	25	80
10	9	7	120	390	60	195	40	130

APPENDIX C SPECIFICATIONS

SB18

Description	Subwoofer enclosure, amplified by LA4X / LA8 / LA12X	
Low frequency limit (-10 dB)	32 Hz ([SB18_100] preset)	
Maximum SPL[1]	138 dB ([SB18_100] preset)	
Transducers	1 × 18" weather-resistant, direct radiation, dual bass-reflex	
Nominal impedance	8 Ω	
Connectors	IN: 1 × 4-point speakON®	LINK: 1 × 4-point speakON®
Rigging components	Integrated pole-mount socket Integrated rigging system Handles integrated into the cabinet	

Dimensions

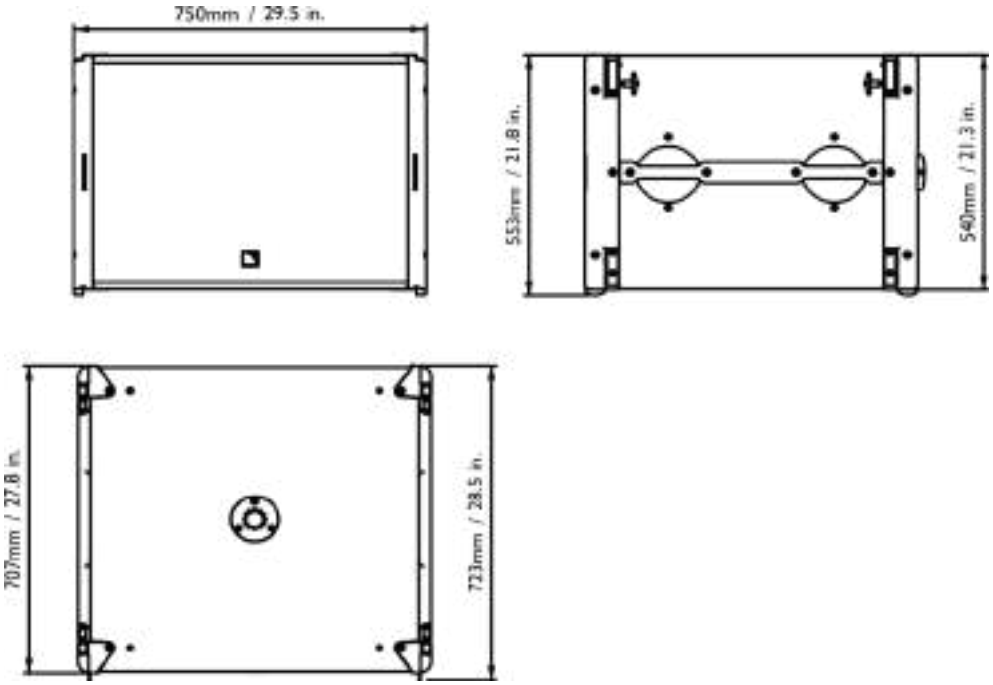

Physical data	**Weight (net):**	52 kg / 115 lb
	Cabinet:	Baltic birch plywood
	Finish:	Dark Grey brown (Pantone 426C)
	Front:	Steel grill with anti-corrosion coating Airnet® acoustically neutral fabric
	Protection rating	IP55
	Rigging components:	Steel with anti-corrosion coating

[1] Peak level measured at 1 m under half-space conditions using pink noise with crest factor 4 (preset specified in brackets).

SB18i

Description	Subwoofer enclosure, amplified by LA4X / LA8 / LA12X, for permanent install	
Low frequency limit (-10 dB)	32 Hz ([SB18_100] preset)	
Maximum SPL[1]	138 dB ([SB18_100] preset)	
Transducers	1 × 18" weather-resistant, direct radiation, dual bass-reflex	
Nominal impedance	8 Ω	
Connectors	IN: 1 × 4-point speakON®	LINK: 1 × 4-point speakON®
Rigging components	Integrated pole-mount socket Integrated rigging system Handles integrated into the cabinet	

Dimensions

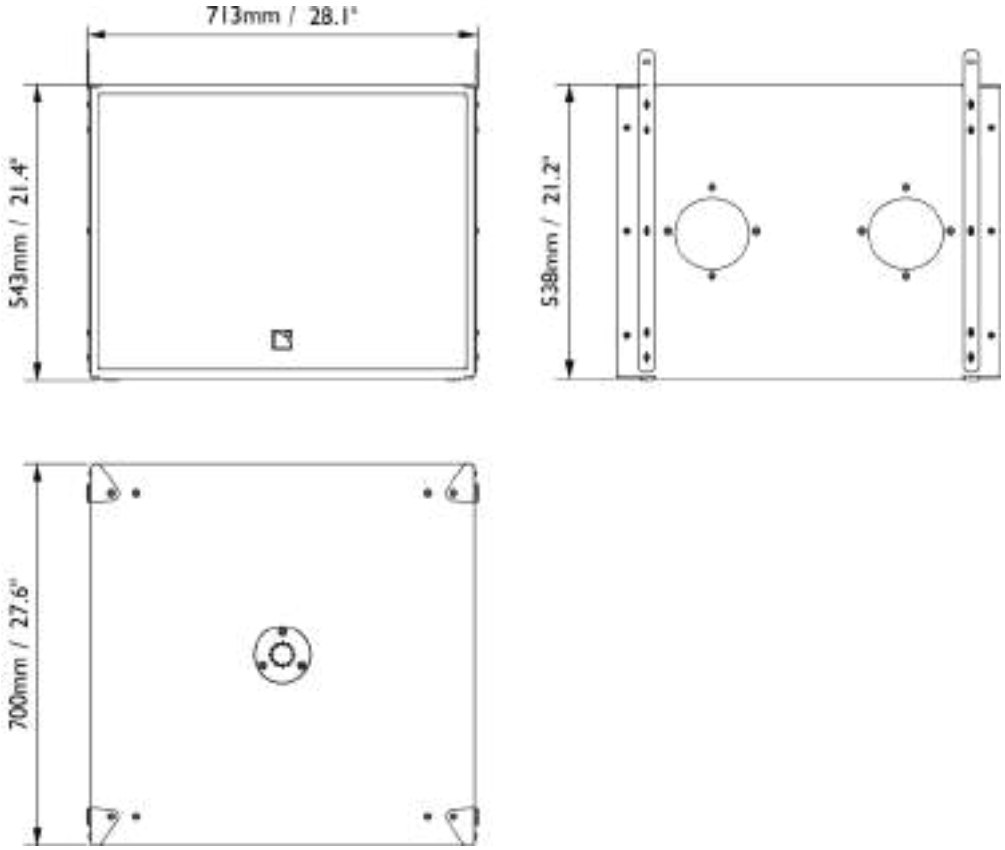

Physical data	Weight (net):	52 kg / 115 lb
	Cabinet:	Baltic birch plywood
	Finish:	Dark Grey brown (Pantone 426C) Custom RAL code on special order
	Front:	Steel grill with anti-corrosion coating Airnet® acoustically neutral fabric
	Protection rating	IP55
	Rigging components:	Steel with anti-corrosion coating

[1] Peak level measured at 1 m under half-space conditions using pink noise with crest factor 4 (preset specified in brackets).

SB18m

Description	Subwoofer enclosure, amplified by LA4X / LA8 / LA12X	
Low frequency limit (-10 dB)	32 Hz ([SB18_100] preset)	
Maximum SPL[1]	138 dB ([SB18_100] preset)	
Transducers	1 × 18" weather-resistant, bass-reflex	
Nominal impedance	8 Ω	
Connectors	IN: 1 × 4-point speakON®	LINK: 1 × 4-point speakON®
Rigging components	Integrated pole-mount socket Captive coupling bars Handles integrated into the cabinet	

Dimensions

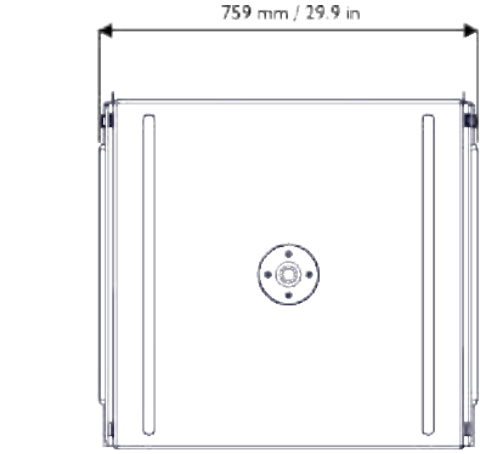

BOTTOM

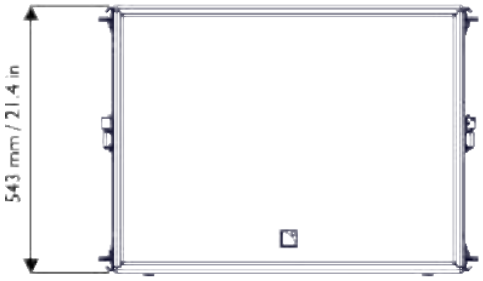

FRONT

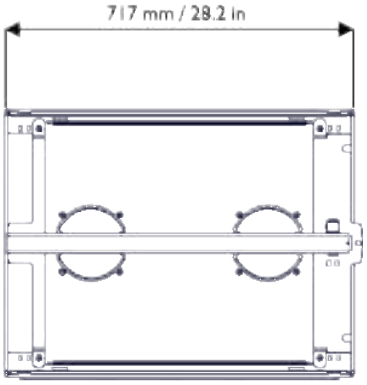

SIDE

Physical data	Weight (net):	62 kg / 137 lb
	Cabinet:	Baltic birch plywood
	Finish:	Dark Grey brown (Pantone 426C) Custom RAL code on special order
	Front:	Steel grill with anti-corrosion coating Airnet® acoustically neutral fabric
	Protection rating:	IP55
	Rigging components:	Steel with anti-corrosion coating

[1] Peak level measured at 1 m under half-space conditions using pink noise with crest factor 4 (preset specified in brackets).

L-Acoustics, an L-Group Company
13 rue Levacher Cintrat – 91460 Marcoussis – France
+33 1 69 63 69 63 – info@l-acoustics.com
www.l-acoustics.com

L-Acoustics GmbH
Steiermärker Str. 3-5
70469 Stuttgart
Germany
+49 7 11 89660 323

L-Acoustics Ltd.
PO. Box Adler Shine - Aston House
Cornwall Avenue - London N3 1LF
United Kingdom
+44 7224 11 234

L-Acoustics Inc.
2645 Townsgate Road, Suite 600
Westlake Village, CA 91361
USA
+1 805 604 0577

L-GROUP

www.l-group.com